ELKTON PLANNING COMMISSION

November 8, 1999 Rcvd 3/17/00

AGENDA

A) 7:00 p.m., - Call to Order

B) Review of Minutes

C) Discussion and Recommendation: CFW Intelos Special Exception Request to construct a digital wireless communications tower on property owned by the Elkton Fire Dept. located near the Town's Electric Substation on Sixth Street. A Public Hearing will need to be set by the Elkton Town Council at the next Council Meeting.

D) Comprehensive Plan

E) Nominations to fill vacancies on the Planning Commission

F) Other Business

G) Adjournment

PLANNING COMMISSION MINUTES

NOVEMBER 8, 1999

Planning Commission Members Present: Thomas Weyrick, Dan Talbot, Bobbie Horne, Rick Workman

Planning Commission Members Absent: Benny King

Staff Present: Rhonda Myers

Call to Order

Mr. Weyrick called the meeting to order.

Discussion and Recommendation: CFW Intelos Special Exception Request to construct digital wireless communications tower on property owned by the Elkton Fire Department.

Henry Clark, a legal representative of CFW, gave a brief presentation to the commission detailing specific plans for the tower. Also, Paula Figgatt, an engineer for CFW Intelos, was present to answer any questions raised by the commission members. Members of the commission inquired about several issuses regarding construction of the tower including:

- Future extensions to the tower and rezoning issues pertaining to that matter
- The danger of lightning because of close proximity to sub-station
- The location of tower in regards to property lines

After questions to the representatives and discussion, Rick Workman made a motion that the Planning Commission recommend the construction of the tower to Town Council with no objections for a public hearing. The motion was seconded by Dan Talbot.

Mr. Weyrick stated that the council would vote on the motion pending no further discussion. The vote was as follows:

YEAS: R. Workman, B. Horne, D. Talbot

The motion carried 3-0.

Adjournment

As there was no further business, Mr. Weyrick adjourned the meeting.

TOWN OF ELKTON

SPECIAL EXCEPTION PERMIT APPLICATION (PUBLIC HEARING)
LIMITED BED AND BREAKFAST PERMIT APPLICATION
HOME OCCUPATION PERMIT APPLICATION
B-3 DISTRICT PERMITTED USE APPLICATION

Please Mark Box:

Special Exception [✓] Bed and Breakfast [ ]
Home Occupation [ ] B-3 Permitted Use [ ]

FEE: $100.00 (To be filled in by Zoning Administration)

DATE: 10/20/99 **Phone:** (540) 946-7296

NAME: Figgatt (Last) Paula (First) J. (MI) (for CPW Interiors)

ADDRESS: 1150 Shenandoah Village Dr. Waynesboro, VA 22980
Route Box # City/Town State ZIP

LOT: 7 **BLOCK:** A **SECTION:** 13 1B3

LAND MAP: 131B3-A-L7 **PARCEL:** L7 **ZONE:** R-4

LOCATION: Elkton Volunteer Fire Company Activities Building

APPLICANT'S SIGNATURE: Paula J. Figgatt **DATE:** 10/20/99

The following fees shall be charged upon the filing of an application:

A) Special Exception Permit $100.00
B) Limited Bed and Breakfast Permit $100.00
C) Home Occupation Permit $100.00
D) B-3 Permitted Use Permit $100.00

Please include two copies of an acceptable site plan. Plan shall include the following:

1) Lot dimensions with property line monuments located thereon.
2) Location and size of existing and proposed structures.
3) Yard dimensions and the use of structures.
4) Easements (public and private).
5) Water courses, fences, street names and street right of way lines.
6) Off-street parking.
7) Other information as may be requested.

PAID
NOV 4 1999
TREASURER
TOWN OF ELKTON, VA.

On a separate sheet of paper, list names and addresses of all adjoining property owners.

Permit Granted:

_____ **Date:** _____

Elkton Volunteer Fire Company Adjoining Property Owners

131B3-(10)-3
Elkmont Partners L.P.
Attention: Manager's Office
101 Elmont Drive
Elkton, VA 22827

131B3-(9)-4
Russell & Bernice McDonald
16521 Sapling Ridge Road
Elkton, VA 22827

131B3-(9)-3
Stacy & Carole Lam
905 6th Street
Elkton, VA 22827

131B3-(9)-2
Alan & Dianna Johnson
903 6th Street
Elkton, VA 22827

131B3-(10)-1
Ashby R. Lam
377 S. East Side Highway
Elkton, VA 22827

Town of Elkton (Sub-Station)
Gerald Monger, Town Manager
173 West Spotswood Avenue
Elkton, VA 22827

302.175 Public Utilities. Public service structures such as power plants or substations; water lines, treatment plants or pumping stations, sewer disposal systems and treatment plants; or such similar operations publicly or privately owned furnishing electricity, gas, rail transport, communications, or related services to the general public.

302.176 Public Water and Sewer System. A water or sewer system owned and operated for public use by a municipality, or county, or by a private individual, corporation, or association.

302.177 Radiowave Tower, Commercial. Equipment used by a broadcasting facility licensed in the public interest, convenience, and necessity by the Federal Communications Commission for transmitting or receiving radio or television signals.

302.178 Ramada. A structure erected over a mobile home for the purpose of providing shade or shelter.

302.179 Residential Density. The overall number of dwelling units allowed per acre.

302.180 Residential Use. Any place, building, or establishment used in whole or in part as a dwelling, or used for the care, protection, or guidance of any persons during any part of the day including, but not limited to, hospitals, schools, single-family and multi-family dwellings, mobile homes, child care centers, family day care homes, group homes, homes for adults, colleges, and correctional institutions.

302.181 Restaurant. Any building in which, for compensation, food or beverages are dispensed for consumption on or off the premises, including among other establishments, cafes, delicatessens, or refreshment stands.

302.182 Restaurant, Drive-In. An eating establishment where the person being served may consume his food and/or drink while sitting in a motor vehicle, as opposed to a restaurant serving exclusively inside or adjacent to the main building.

302.183 Retail Stores and Businesses. Buildings for display and sale of merchandise at retail or for the rendering of personal services (but exclusive of coal, wood, and lumber yards) such as the following: drug store, newsstand, food store, candy shops, milk dispensary, dry goods and notions store, antique store, gift shop, hardware store, household appliance store, furniture store, florist, optician, music and radio store, tailor shop, barber shop, and beauty shop.

302.184 Right-of-Way. Access over or across particularly described property for a specific purpose or purposes.

604.04-6 Parking as provided for in Article 7;

604 04-7 Private parking garage;

604.04-8 Shelter for house pets;

604.04-9 Private swimming pool;

604.04-10 Satellite antenna.

605.00 RESIDENTIAL DISTRICT R-4

605.01 Purpose of Residential District R-4. The purpose of the R-4 Residential District is to protect the residential character of established neighborhoods and communities. The regulations for this District tend to reflect and protect established neighborhoods which reflect on long standing character.

605.02 Permitted Uses. Within the Residential Limited District R-4 the following uses are permitted:

605.02-1 Single-family detached dwellings;

605.02-2 Two (2) family dwellings provided that the intent of this District is maintained in the design and use of two (2) family dwellings;

605.02-3 Public utilities;

605.02-4 Public water and sewage facilities;

605.02-5 Public service or storage buildings.

605.03 Special Exceptions. When, after review of an application and hearing thereon, in accordance with Article 8 herein, the following uses may be permitted by Special Exception Permit:

605.03-1 Schools;

605.03-2 Churches and other places of worship with attendant educational and recreational facilities. No recreational facility shall be located closer than one hundred (100) feet from any residential lot;

605.03-3 Public parks, playgrounds, recreational facilities, tennis courts, public swimming pools and outdoor recreational activities, all of a noncommercial nature. No swimming pool or structure shall be located closer than one hundred (100) feet from any residential lot;

605.03-4 Child care centers and family day care homes. The main structure shall not be located closer than fifty (50) feet from any residential lot;

605.03-5 Family care homes, foster homes or group homes serving the mentally retarded, developmentally disabled or others, rest homes, homes for adults, or nursing homes, provided that licensing requirements are met;

★ 605.03-6 Commercial radio wave towers;

605.03-7 Bed and breakfast facilities, limited;

605.03-8 Cemeteries;

605.03-9 Modular home;

605.03-10 Home occupations in accordance with Section 705.00;

605.03-11 Other uses of the same general character as those listed above and deemed appropriate by the Planning Commission and in accordance with Article 8.

605.04 Accessory Uses. Where a lot is devoted to a permitted principal use, customary accessory uses and structures are authorized including, but not limited to, the following:

605.04-1 Home occupations provided that the requirements of Article 7, Section 705 are met;

605.04-2 Living quarters of persons principally employed on the premises;

605.04-3 Travel trailers or office trailers, which may be stored within the minimum yard requirements and shall be prohibited from occupancy;

605.04-4 Temporary buildings for uses incidental to construction work, such buildings shall be removed upon completion or abandonment of the construction work;

605.04-5 Signs as provided for in Article 7;

605.04-6 Parking as provided for in Article 7;

605.04-7 Private parking garage;

605.04-8 Shelter for house pets;

605.04-9 Private swimming pool;

605.04-10 Satellite antenna.

telecommunications facilities to the natural setting and the built environment.

(d) If an antenna is installed on an alternative telecommunications structure, the antenna and supporting electrical and mechanical equipment must be of a color that is identical to, or closely compatible with, the color of the alternative telecommunications structure so as to make the antenna and related equipment as visually unobtrusiveness as possible.

(e) A telecommunications facility or telecommunications tower shall not be artificially lighted, unless required by the FAA or other applicable authority. If lighting is required, the county may review the available lighting alternatives and approve the design that would cause the least disturbance to the surrounding views.

(f) No advertising of any type may be placed on the telecommunications facility, or other structures associated with the telecommunications facility. Signs shall be required displaying the name, registration number, and emergency contact number of the tower owner. The sign shall not exceed four (4) square feet in size and shall be located on the security fence or other approved location.

(P.C. Ord. No. 97-22, 10-8-97)

Sec. 17-145.03. Federal requirements.

All telecommunications towers and antennas must meet or exceed current standards and regulations of the FAA, the FCC, and any other agency of the federal government with the authority to regulate such facilities. If such standards and regulations are changed, then the owners and operators of the telecommunications towers and antennas governed by this division shall bring such telecommunications towers and antennas into compliance with such revised standards as required. Failure to bring telecommunications towers and antennas into compliance with such revised standards and regulations shall constitute grounds for the removal of the telecommunications towers and antennas at the owner's or operator's expense.

(P.C. Ord. No. 97-22, 10-8-97)

Sec. 17-145.04. Structural requirements.

(a) Prior to the use or extension of a telecommunications tower, the owner shall have obtained approval of the structural integrity by a registered professional engineer licensed in the Commonwealth of Virginia and a copy of such report shall be filed with the planning and zoning department.

(b) To ensure the structural integrity of a telecommunications facility or telecommunications tower, the owner or operator of a telecommunications facility or telecommunications tower shall ensure that it is maintained in compliance with standards contained in applicable federal, state and local building codes and regulations.

(P.C. Ord. No. 97-22, 10-8-97)

Sec. 17-145.05. Setbacks and separation.

The following setbacks and separation requirements shall apply to all telecommunications facilities except alternative telecommunications structures:

(a) Telecommunications facility must be set back a distance equal to one hundred ten (110) percent of the height of the telecommunications tower from any off-site structures used for human habitation.

(b) Telecommunications towers, security fencing, and accessory facilities must meet all setback requirements for primary structures for the zoning district in which the telecommunications facility is located.

(P.C. Ord. No. 97-22, 10-8-97)

Sec. 17-145.06. Security requirements.

The following requirements shall govern the securing of telecommunications facilities:

(a) Telecommunications facilities, that include buildings or added structures, shall be enclosed by security fencing not less than six (6) feet in height and shall also be equipped with an appropriate anti-climbing device unless the county determines that its safety requirements are met without it.

(b) If a telecommunications tower or antenna is mounted on an alternative telecommunications structure the security fencing shall not be required unless the county determines that its safety requirements are not met without it.

(c) Monopole towers and other single-pole structures, standing alone, shall be secured by anti-climbing devices.

(P.C. Ord. No. 97-22, 10-8-97)

Sec. 17-145.07. Landscaping requirements.

The following requirements shall govern the planting and maintenance of landscaping surrounding telecommunications facilities.

(a) Telecommunications facilities shall be landscaped with a buffer of plant materials that effectively screens the view of the support buildings and fence from adjacent property. The standard buffer shall consist of a landscaped strip at least four (4) feet wide outside the perimeter of the compound.

(b) Existing mature tree growth and natural land forms on the site shall be preserved to the maximum extent possible. In some cases, such as telecommunications facilities sited on large, wooded lots, natural growth around the property perimeter may be a sufficient buffer.

(P.C. Ord. No. 97-22, 10-8-97)

Sec. 17-145.08. Information required and factors considered in granting special use permits.

Each applicant requesting a special use permit under this division shall submit to the planning and zoning department the following for consideration by the board of supervisors:

(a) The following shall be required for a telecommunications facility, telecommunications tower, or for siting an antenna on an alternative telecommunications structure:

(1) An inventory and contour map of its existing facilities that are within the county and at least five (5) miles from the county line, including specific information about the location, height, coverage and capacity zones, and design of each telecommunications facility, telecommunications tower and antenna;

(2) A conceptual plan of proposed sitings;

(3) A scaled site plan including topography;

(4) A scaled elevation view and other supporting drawings;

(5) Calculations, and other documentation, signed and sealed by appropriate licensed professionals, showing the location and dimensions of all improvements;

(6) Radio frequency coverage;

(7) Setbacks;

(8) Parking;

(9) Security fencing;

(10) Landscaping;

(11) Adjacent uses;

(12) An engineering report, certifying that the proposed telecommunications tower is compatible for a minimum of three (3) similar users including the primary user;

(13) Information demonstrating that antennas, telecommunications towers, and telecommunications facilities for possible co-locator antennas are no higher in elevation than necessary;

(14) Height of the proposed telecommunications tower;

(15) Proximity of the telecommunications tower to residential structures and residential district boundaries;

(16) Nature of the uses on adjacent and nearby properties;

(17) Surrounding topography (at least a four hundred-foot radius);

(18) Surrounding tree coverage and foliage (at least a four hundred-foot radius);

(19) Design of the telecommunications facility and telecommunications tower, with particular reference to design characteristics that have the effect of reducing or eliminating visual obtrusiveness;

(20) Proposed ingress and egress;

(21) Co-location policy which outlines policy regarding company's willingness to co-locate on other company's telecommunications towers and company's willingness to accept other users on its telecommunications towers;

(22) Consistency with the comprehensive plan and the purposes to be served by zoning;

(23) Actual photographs from the site showing adjoining properties and other relevant views and simulated photographic image of the proposed telecommunications tower from the adjoining properties; and

(24) Other information deemed by the county to be necessary to assess compliance with this division.

(b) The following requirements shall pertain to the co-location of an antenna that (1) will be placed on a telecommunications facility or telecommunications tower that was sited under the provisions of this division and (2) will not increase the height of the telecommunications tower:

(1) An inventory and contour map of its existing facilities that are within the county and at least five (5) miles from the county line, including specific information about the location, height, coverage and capacity zones, and design of each telecommunications facility, telecommunications tower and antenna;

(2) A conceptual plan of proposed sitings;

(3) Calculations, and other documentation, signed and sealed by appropriate licensed professionals, showing the location and dimensions of all improvements;

(4) Radio frequency coverage;

(5) Height of telecommunications tower with proposed antenna;

(6) Other information deemed by the county to be necessary to assess compliance with this division.

The planning and zoning department may share such information with other applicants applying for approvals or special use permits under this division or other organizations seeking to locate telecommunications towers within the county, provided, however that the planning and zoning department is not, by sharing such information, in any way representing or warranting that such sites are available or suitable.

(P.C. Ord. No. 97-22, 10-8-97)

Sec. 17-145.09. Removal of defective or abandoned telecommunications facilities.

Any antenna, telecommunications tower, or telecommunications facility found to be defective or unsafe shall be repaired to meet federal, state and local safety standards or removed within six (6) months at the owner's or operator's expense. Any antenna, telecommunications tower, or telecommunications facility that is not operated for a continuous period of twenty-four (24) months shall be considered abandoned, and the owner of such antenna, telecommunications tower, or telecommunications facility shall remove same within ninety (90) days of receipt of notice from the county notifying the owner of such removal requirement. Removal includes the removal of the antennas, telecommunications towers, and telecommunications facilities, fence footers, underground cables and support buildings. The buildings and foundation may remain with land owner's approval. If there are two (2) or more users of a single telecommunications facility or telecommunications tower, then this provision shall not become effective until all users cease using the antennas, and telecommunications tower. If the antenna, telecommunications tower, and telecommunications facility are not removed as herein required, the county may either seek court enforcement of such removal or the county may remove the antenna, telecommunications tower, and telecommunications facility at the expense of the owner or operator of the telecommunications facility as the county, in its sole discretion, determines.
(P.C. Ord. No. 97-22, 10-8-97)

Sec. 17-146—17-157. Reserved.

CFW WIRELESS

ROCKINGHAM COUNTY

EKLTON VIRGINIA

Elkton
ST 213 HB 209

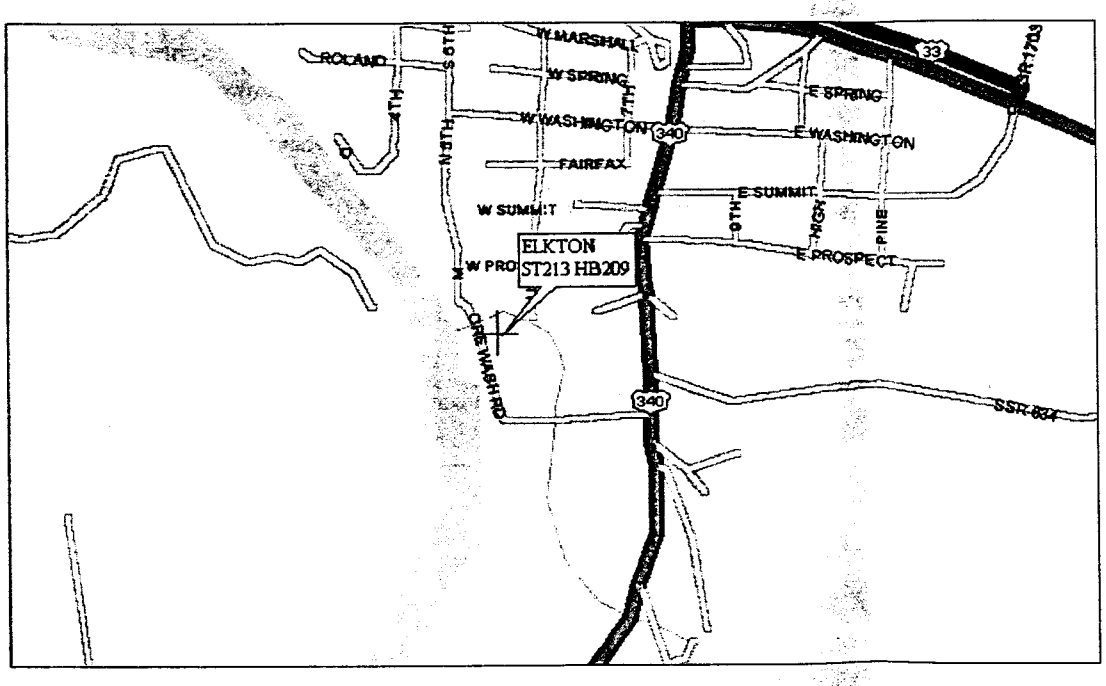

INDEX:

DRAWING NO.	TITLE
	TITLE
1	LOCATION
2	ELEVATION
3	SITE PLAN
4	ANTENNA GROUND DETAIL
5	ANTENNA DESIGNS
6	STRUCTURAL DETAILS/ PAD
7	STRUCTURAL DETAILS

VICINITY MAP

NOT TO SCALE

SITE LATITUDE: 38° 23' 54.1" N
SITE LONGITUDE: 78° 37' 26.3" E

APPROVED BY:	DATE:
ENGINEER:	
DIRECTOR:	
CONTRACTOR:	

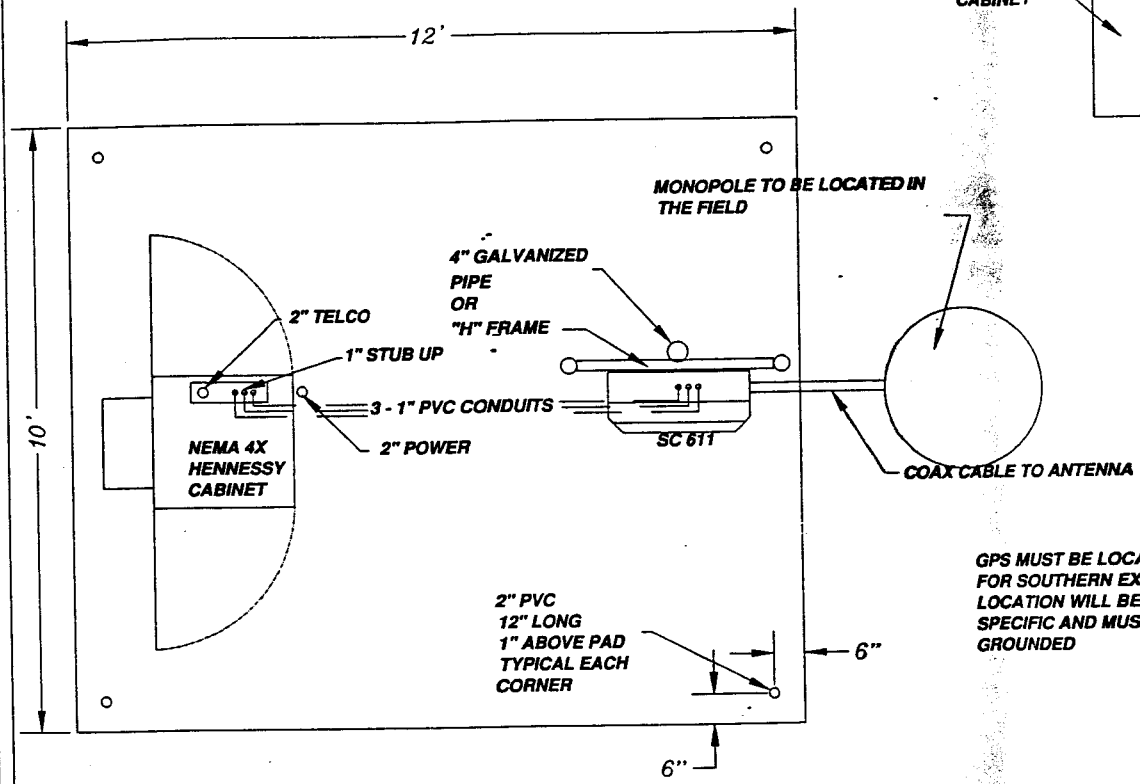

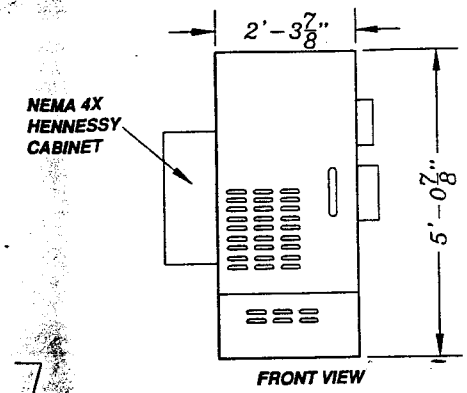

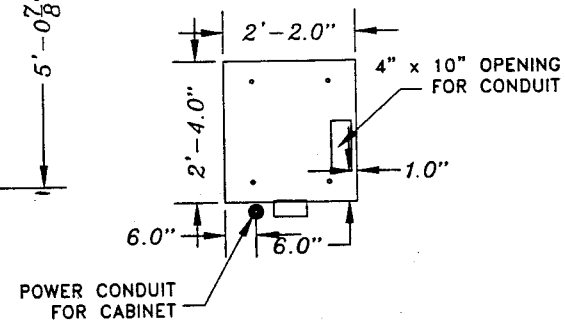

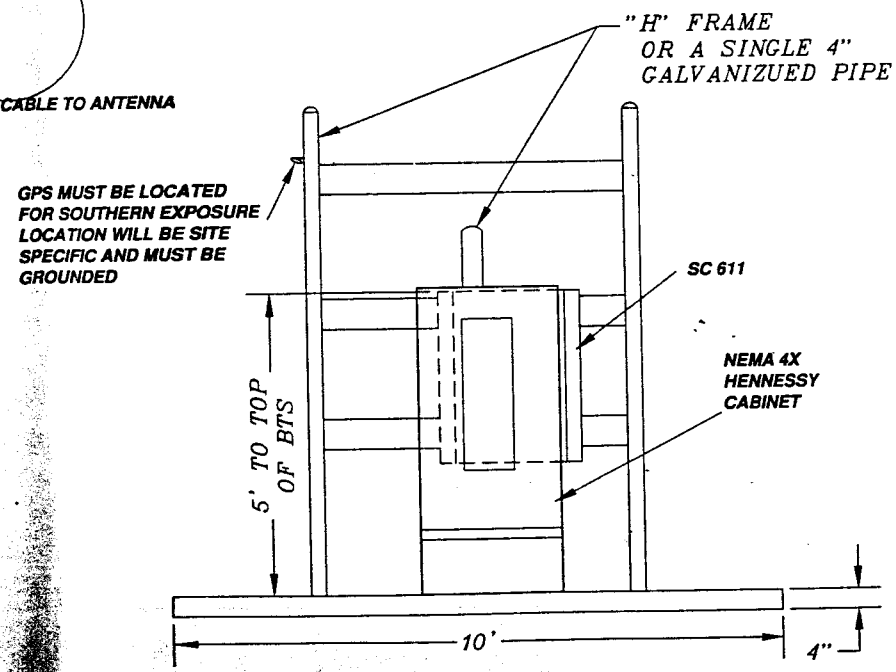

NOTE:
"H" FRAME TO BE MADE UP OF 3" SC. 40 GALVANIZED PIPE AND UNI-STRUT PLACED TO FIT INSTALLATION. SUPPORT STRUCTURE MUST BE SUBMITTED TO CFW FOR APPROVAL PRIOR TO INSTALLATION

CFW WIRELESS

33 EAST / INGLEWOOD HB200
SC611 SUPPORT DETAILS

Scale:

Dwg By: BJW

Date: 09-01-99

Sheet#: 2

Contractor:

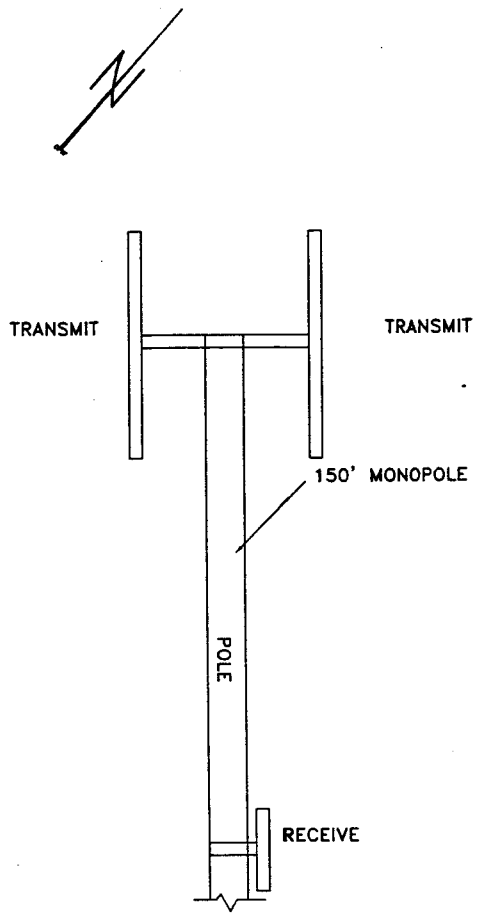

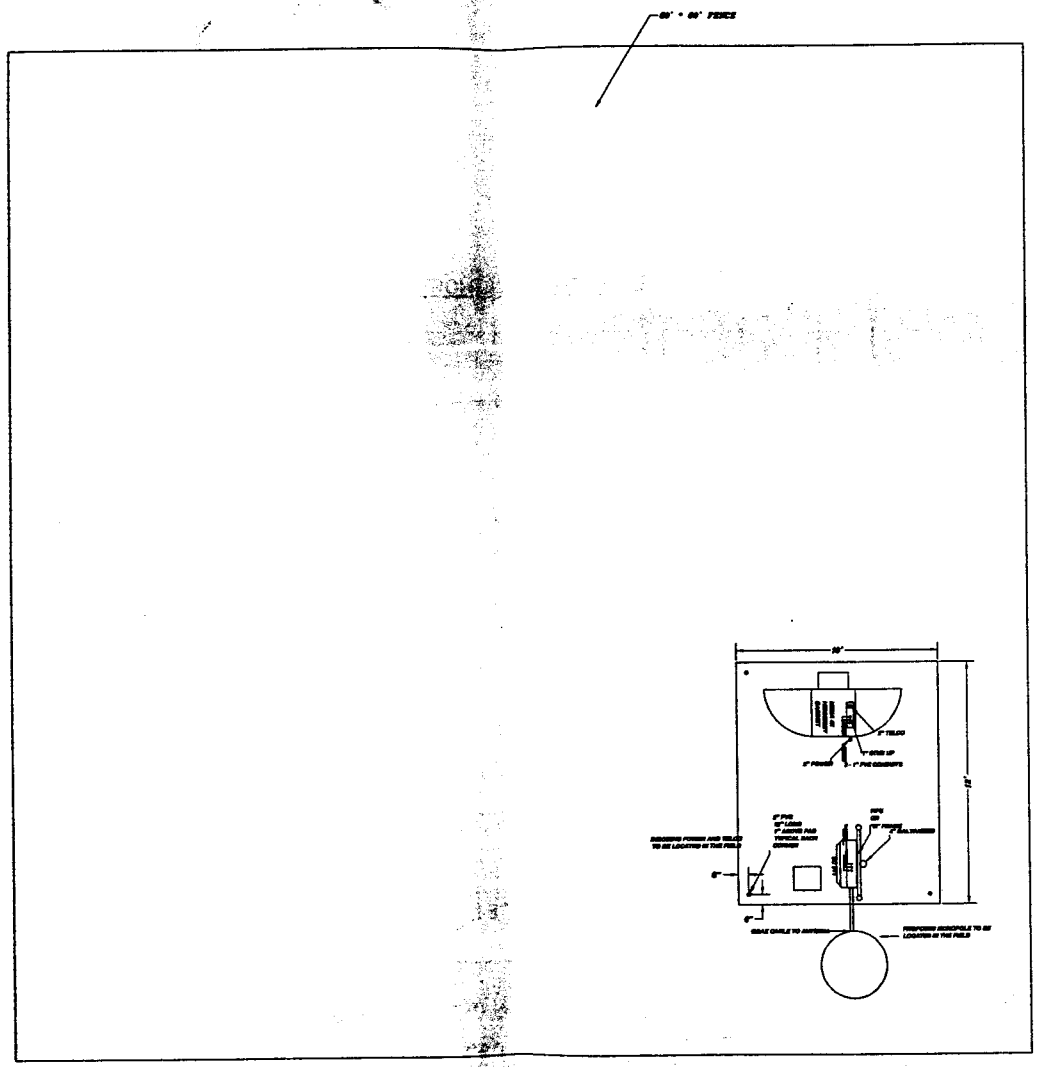

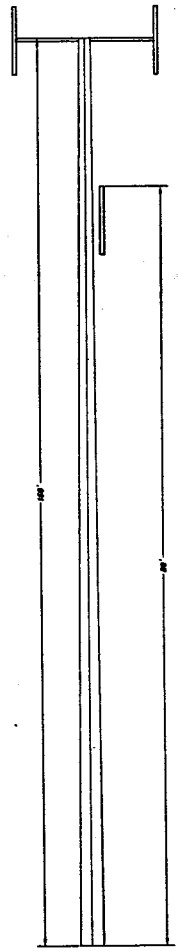

CFW WIRELESS

RT 275 ELKTON ST213
SITE PLAN

Scale:

Dwg By: BJW

Date: 08-31-99

Sheet#: 3

Contractor:

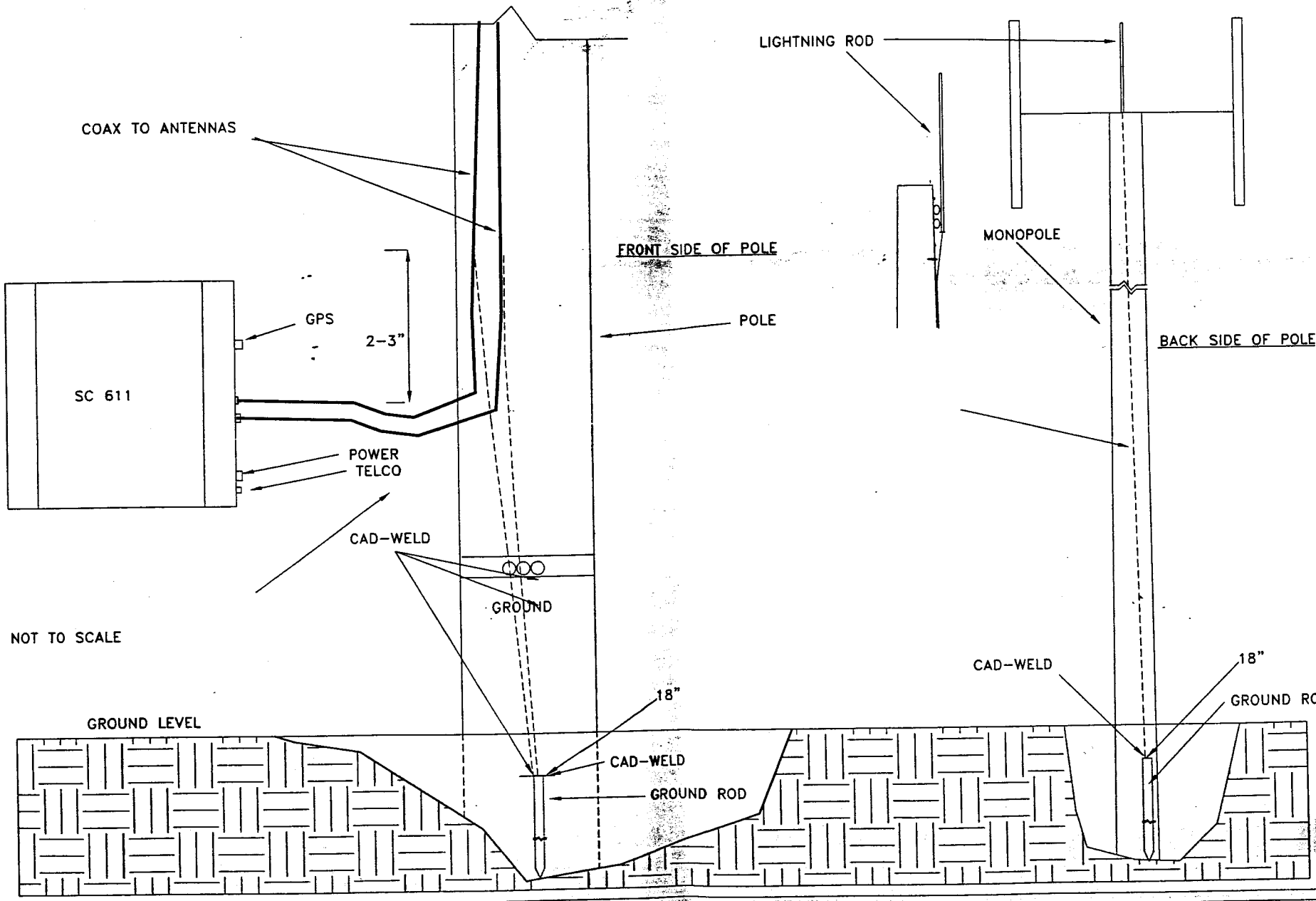

CFW WIRELESS

33 EAST / INGLEWOOD HB 200
ANTENNA GROUND DETAIL

Dwg By: BJW

Date: 09-01-99

Sheet #: 4

Contractor:

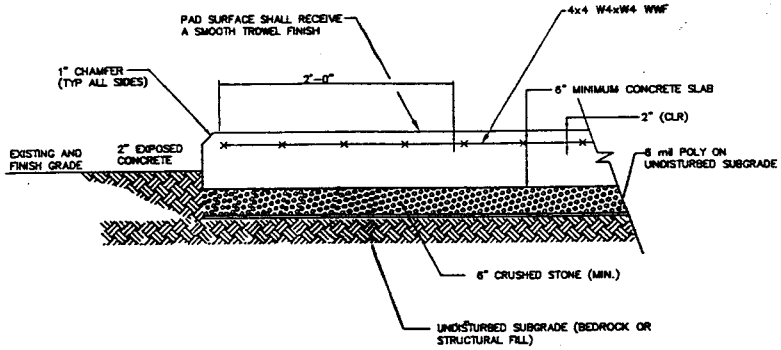

FOUNDATION AND PAD

NO SCALE

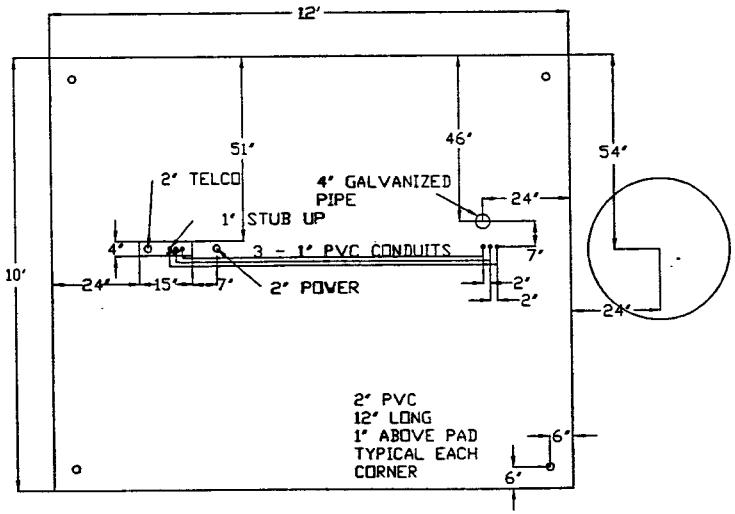

EQUIPMENT FOUNDATION NOTES:

1. GENERAL

   A. THESE DRAWINGS DO NOT INCLUDE NECESSARY COMPONENTS FOR CONSTRUCTION SAFETY.

   B. CONTRACTOR SHALL DETERMINE EXACT LOCATION OF EXISTING UTILITIES BEFORE COMMENCING WORK. HE AGREES TO BE FULLY RESPONSIBLE FOR ANY AND ALL DAMAGES WHICH MIGHT BE OCCASIONED BY HIS FAILURE TO EXACTLY LOCATE AND PRESERVE UNDERGROUND UTILITIES.

   C. INCORRECTLY FABRICATED, DAMAGED, OR OTHERWISE MISFITTING OR NONCONFORMING MATERIALS OR CONDITIONS SHALL BE REPORTED TO THE OWNER PRIOR TO REMEDIAL OR CORRECTIVE ACTION. ANY SUCH ACTION SHALL REQUIRE APPROVAL.

   D. EACH CONTRACTOR SHALL COOPERATE WITH THE OWNER'S REPRESENTATIVE, AND COORDINATE HIS WORK WITH THE WORK OF OTHERS.

2. DESIGN LOADS

   A. ELECTRICAL CABINET: HENNESSY EQUIPMENT CABINET 285 LBS

   B. PRESUMPTIVE BEARING CAPACITY: 2,000 PSF

3. EXCAVATIONS/FOUNDATION

   A. FOUNDATION EXCAVATION SHALL BE HAND-TRIMMED TO REMOVE LOOSE MATERIALS.

   B. EXTERIOR FOUNDATION BACKFILL SHALL BE SELECTED GRANULAR FILL.

   C. ALL STRUCTURAL BACKFILL AND SUBBASE UNDER SLABS-ON-GRADE AND FOOTINGS SHALL BE "SW" OR BETTER PER ASTM D-2487 COMPACTED TO A MINIMUM 95% STANDARD PROCTOR DENSITY PER ASTM D 698.

   D. DO NOT PLACE FOOTINGS IN WATER OR ON FROZEN GROUND.

   E. SOIL BEARING SURFACES, PREVIOUSLY ACCEPTED BY OWNER'S REPRESENTATIVE, WHICH ARE ALLOWED TO BECOME SATURATED, FROZEN OR DISTURBED SHALL BE REWORKED TO SATISFACTION OF OWNER'S REPRESENTATIVE.

   F. DO NOT ALLOW GROUND BENEATH FOOTINGS TO FREEZE.

   G. FOOTING EXCAVATIONS SHALL BE CUT NEAT.

   H. SUBGRADE BELOW SLAB-ON-GRADE SHALL BE REVIEWED AND ACCEPTED BY OWNER'S REPRESENTATIVE BEFORE CONCRETE SLAB PLACEMENT.

4. CONCRETE

   A. DESIGN AND CONSTRUCTION OF ALL CONCRETE ELEMENTS SHALL CONFORM TO THE LATEST EDITIONS OF THE FOLLOWING APPLICABLE CODES: ACI 301 "SPECIFICATIONS FOR STRUCTURAL CONCRETE FOR BUILDINGS"; ACI 318, "BUILDING CODE REQUIREMENTS FOR REINFORCED CONCRETE";

   B. CONCRETE SHALL BE NORMAL WEIGHT, 6% AIR ENTRAINED (±1.5%) AND HAVE A MINIMUM 28-DAY COMPRESSIVE STRENGTH OF 4000 PSI UNLESS OTHERWISE NOTED.

   C. REINFORCING SHALL CONFORM TO ASTM A-615 WITH SUPPLEMENT. MINIMUM YIELD STRENGTH Fy = 60 KSI. REINFORCING DETAILS SHALL BE IN ACCORDANCE WITH THE LATEST EDITION OF ACI 315.

   D. FIBROUS REINFORCEMENT SHALL BE MONOFILAMENT OR FIBRILLATED POLYPROPYLENE ADDED AT A RATE OF 1.5 POUNDS PER CUBIC YARD. FIBROUR REINFORCEMENT SHALL BE CONSIDERED SECONDARY REINFORCEMENT AND SHALL BE INCLUDED IN ALL CONCRETE.

   E. CONCRETE COVER AROUND REINFORCING BARS (U.N.O.) SHALL BE:

      1. CONCRETE CAST AGAINST AND PERMANENTLY EXPOSED EARTH.....3"
      2. CONCRETE EXPOSED TO EARTH, WEATHER.....2"
      3. SLABS.....3/4"
      4. ALL OTHER CONCRETE.....1 1/2"

   F. UNLESS INDICATED OTHERWISE ON THE DRAWINGS, REINFORCEMENT SPLICES SHALL MEET CLASS B, TENSION LAP REQUIREMENTS IN ACCORDANCE WITH ALL PROVISIONS OF ACI 318 LATEST EDITION, UNLESS NOTED OTHERWISE.

   G. CURING COMPOUNDS SHALL CONFORM TO ASTM C-309.

   H. ADMIXTURES SHALL CONFORM TO THE APPROPRIATE ASTM STANDARD AS REFERENCED IN ACI-301.

   I. DO NOT WELD OR TACKWELD REINFORCING STEEL.

   J. ALL DOWELS, ANCHOR BOLTS, EMBEDDED STEEL, ELECTRICAL CONDUITS, PIPE SLEEVES, PIPING, INSERTS, GROUNDS AND ALL OTHER EMBEDDED ITEMS AND FORMED DETAILS SHALL BE IN PLACE BEFORE START OF CONCRETE PLACEMENT.

   K. LOCATE ADDITIONAL CONSTRUCTION JOINTS REQUIRED TO FACILITATE CONSTRUCTION AS ACCEPTABLE TO ENGINEER. PLACE REINFORCEMENT CONTINUOUSLY THROUGH JOINT.

   L. REINFORCEMENT SHALL BE COLD BENT WHENEVER BENDING IS REQUIRED.

   M. COLD-WEATHER PLACING: COMPLY WITH PROVISIONS OF ACI 306 AND AS FOLLOWS. PROTECT CONCRETE WORK FROM PHYSICAL DAMAGE OR REDUCED STRENGTH THAT COULD BE CAUSED BY FROST, FREEZING ACTIONS, OR LOW TEMPERATURES.

   N. WHEN AIR TEMPERATURE HAS FALLEN TO OR IS EXPECTED TO FALL BELOW 40°F(4°C) UNIFORMLY HEAT WATER AND AGGREGATES BEFORE MIXING TO OBTAIN A CONCRETE MIXTURE TEMPERATURE OF NOT LESS THAN 50°F (10°C) AND NOT MORE THAN 80°F(27°C) AT POINT OF PLACEMENT.

      1. DO NOT USE FROZEN MATERIALS CONTAINING ICE OR SNOW.
      2. DO NOT USE CALCIUM CHLORIDE, SALT, AND OTHER MATERIALS CONTAINING ANTIFREEZE AGENTS OR CHEMICAL ACCELERATORS UNLESS OTHERWISE ACCEPTED IN MIX DESIGNS.
      3. PROVISIONS SHALL BE MADE FOR MAINTAINING THE CONCRETE AT A MINIMUM TEMPERATURE OF NOT LESS THAN 50°F AND NOT MORE THAN 85°F FOR A PERIOD OF AT LEAST SEVEN(7) DAYS.
      4. USE OF NON-VENTED HEATERS SHALL NOT BE PERMITTED. AT THE END OF THE CURING PERIOD, GRADUALLY REDUCE THE TEMPERATURE AT A RATE NOT TO EXCEED 1 DEGREE PER HOUR UNTIL THE TEMPERATURE WITHIN THE ENCLOSURE EQUALS THE TEMPERATURE OUTSIDE THE ENCLOSURE, IN ACCORDANCE WITH ACI 306.

   O. HOT-WEATHER PLACING: WHEN HOT WEATHER CONDITIONS EXIST THAT WOULD SERIOUSLY IMPAIR QUALITY AND STRENGTH OF CONCRETE, PLACE CONCRETE IN COMPLIANCE WITH ACI 305 AND AS HEREIN SPECIFIED

      1. COOL INGREDIENTS BEFORE MIXING TO MAINTAIN CONCRETE TEMPERATURE AT TIME OF PLACEMENT BELOW 90°F(32°C). MIXING WATER MAY BE CHILLED OR CHOPPED ICE MAY BE USED TO CONTROL TEMPERATURE PROVIDED WATER EQUIVALENT OF ICE IS CALCULATED TO TOTAL AMOUNT OF MIXING WATER
      2. COVER REINFORCING STEEL WITH WATER SOAKED BURLAP IF IT BECOMES TOO HOT, SO THAT THE STEEL TEMPERATURE WILL NOT EXCEED THE AMBIENT AIR TEMPERATURE IMMEDIATELY BEFORE IMBEDMENT IN CONCRETE.
      3. FOG SPRAY FORMS, REINFORCING STEEL, AND SUBGRADE JUST BEFORE CONCRETE IS PLACED.
      4. USE WATER-REDUCING RETARDING ADMIXTURE WHEN REQUIRED BY HIGH TEMPERATURES, LOW HUMIDITY, OR OTHER ADVERSE PLACING CONDITIONS WHEN ACCEPTABLE TO THE ENGINEER.

CFW WIRELESS

33 EAST / INGLEWOOD HB200
STRUCTURAL DETAIL

Dwg By: BJW

Date: 09-01-99

Sheet#: 5

Contractor:

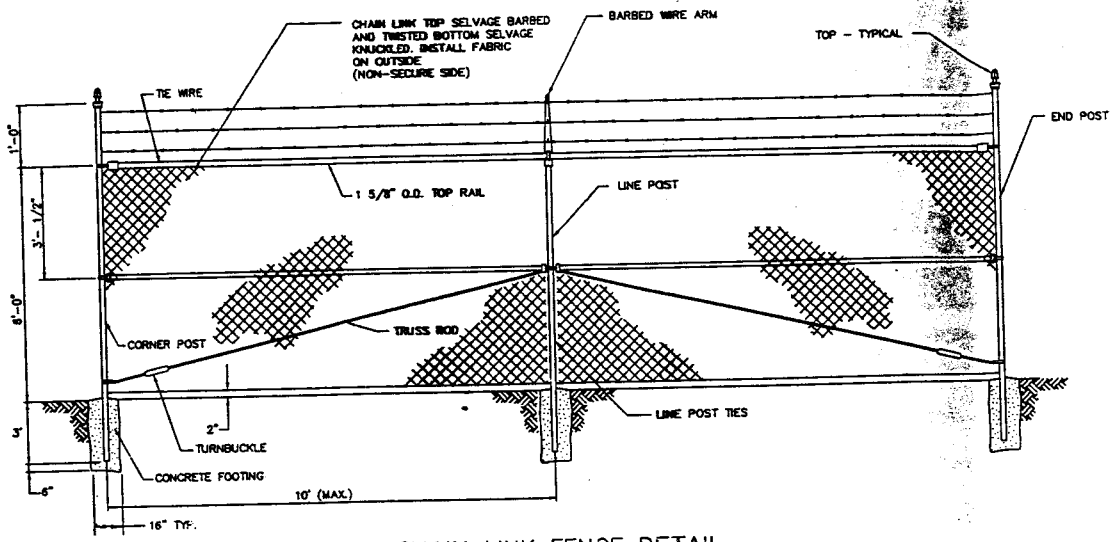

CHAIN LINK FENCE DETAIL

NO SCALE

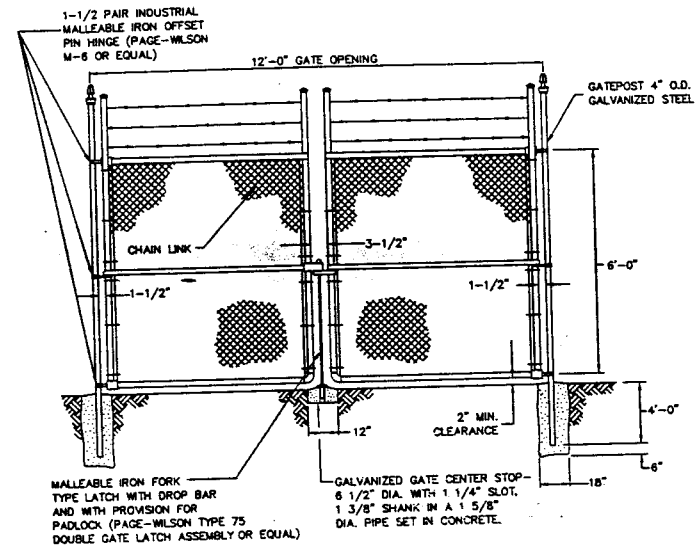

DOUBLE SWING GATE

NO SCALE

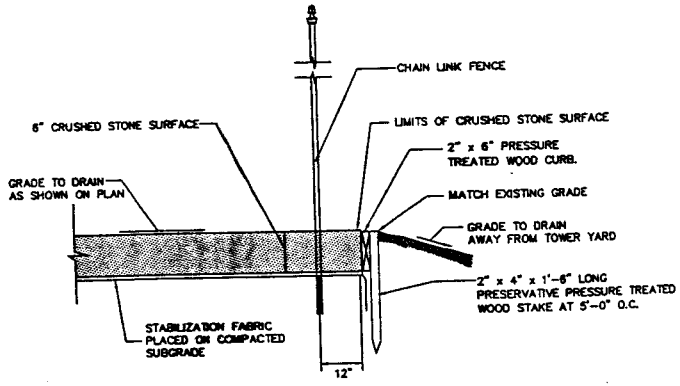

SECTION THROUGH TOWER YARD

NO SCALE

ANTENNA TYPE	7221.14		7221.14	
FROM/TO	AZIMUTH 60°	DOWNTILT=3°	AZIMUTH 245°	DOWNTILT=3°
	COAX CABLE SIZE	LENGTH (FT)* RX/TX	COAX CABLE SIZE	LENGTH (FT)* RX/TX
ANTENNA TO PRIMARY RADIO CABINET	1 5/8"	225'	1 5/8"	225'

* ESTIMATED LENGTHS FROM AVAILABLE INFORMATION. FIELD ENGINEER TO UPDATE ON AS-BUILT DRAWINGS.

ANTENNA LINE SCHEDULE

CFW WIRELESS

33 EAST / INGLEWOOD HB 200

SRUCTURAL DETAILS

Scale: No Scale

Dwg by: BJW

Date: 08-10-99

Sheet#: 6

Contractor:

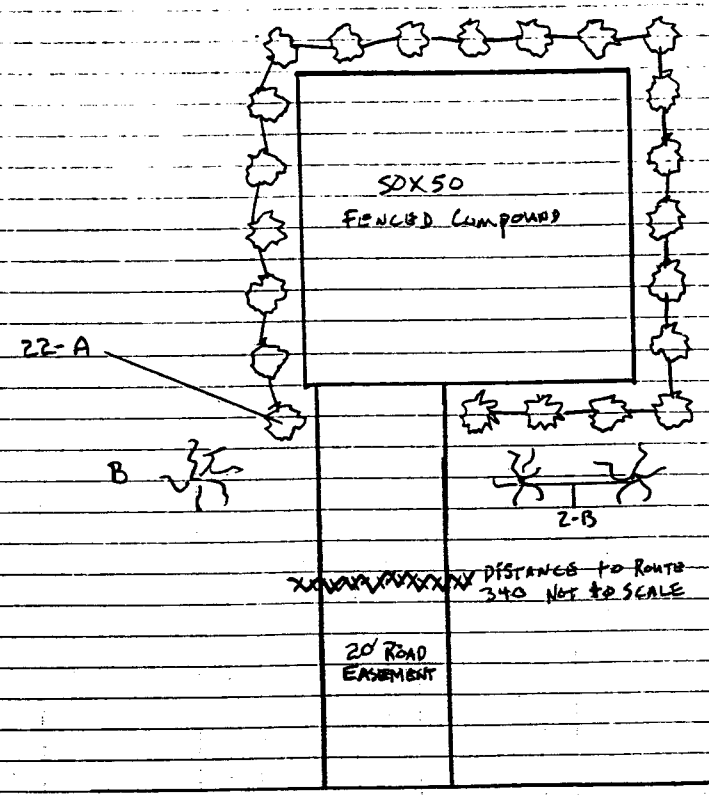

PLANT LIST			
Key	Qty	Size	Variety
A	22	4/5'	Western Cedar
B	3	8'	Sugar Maple

LEE P. QUILLEN
Landscape Designer
Waynesboro
LANDSCAPE & GARDEN CENTER
703-942-4646 FAX 703-949-7743
2132 West Main Street Waynesboro, Va. 22980

VIRGINIA SOCIETY OF LANDSCAPE DESIGNERS
LEE P. QUILLEN
No. 002
CERTIFIED

CFW WIRELESS
ST 213 LANDSCAPE SCREEN
ELKTON, VA

Scale 1" = 20' Date 10-12-99